15-13 D / TE130-6
Fan

Double Inlet Centrifugal
5000 CFM , 220V 1N~ 50 Hz

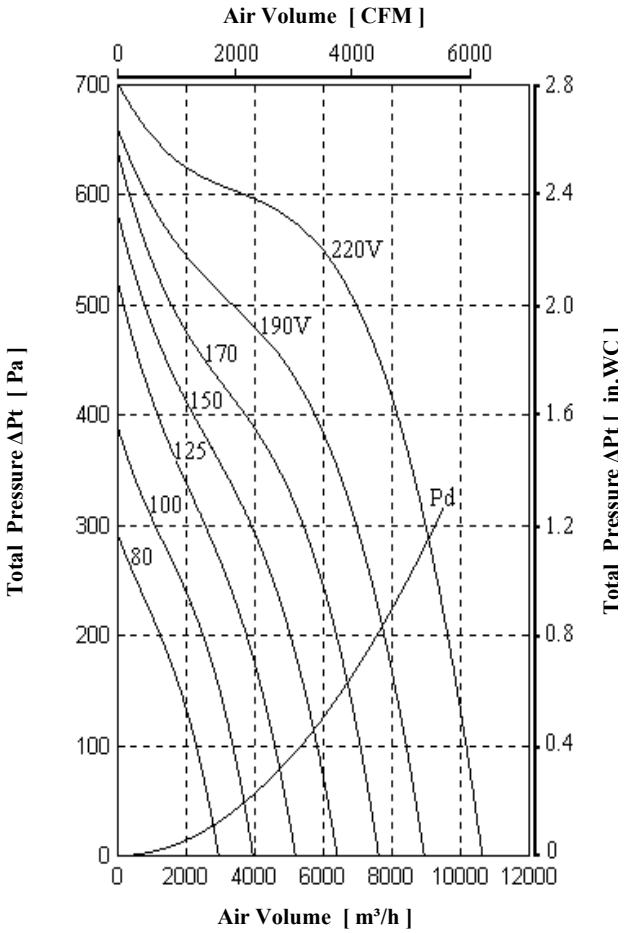

Diagram is based on standard air ρ=1.2 kg/m³. ***Pd*** is system curve for dynamical pressure part related to Fan Outlet Area (Curve for free blowing fan). *Total Pressure* (the sum of the dynamic and static pressures) is shown in relation to the *Air Volume*, Dynamic pressure is shown below system line Pd and Static Pressure is shown above that line.

- Voltage Range 100 ~ 220 [V]
- Frequency 50 [Hz]
- Current *max* *@ free air* 9.0 [A]
- Power *max* *@ free air* 1900 [W]
- Speed *@ free air* 700 [rpm]
- Insulation Class H
- Protection Class IP65
- Power Factor (cos φ) 0.95
- Capacitor 2*30 [μF] 400 [V]
- Net Weight 52 [kg]
- Starting Torque 8 [nm]
- Starting Current *max* 14 [A]
- Air Temperature *max* 60 [ºC]

Voltage [V]	Air Volume [m³/h] @ ρ=1.2 kg/m³					
	Free Air	Total Pressure ΔPt [Pa]				
		100	*250*	*400*	*500*	*600*
80	2790	2280	540			
100	3680	3350	1820			
125	4720	4570	3190	1160	170	
150	5710		4490	2190	770	
170	6700		5940	3720	1550	350
190	7700		7390	5750	3350	830
220	9040			8150	6930	3770

Wheel Diameter = 380 mm = 15"
51 Blades , 35 mm = 1 3/8 " Chord Width
Tip Speed = rpm * 0.019 [m/s]
= rpm * 3.95 [FPM]
Outlet Area = 0.12 [m²] = 1.36 [SQ.FT]

Voltage [V]	Sound Pressure Level dB(A)						
	80	***100***	***125***	***150***	***170***	***190***	***220***
Inlet	45	51	55	61	66	68	71
Outlet	47	52	58	63	68	70	73
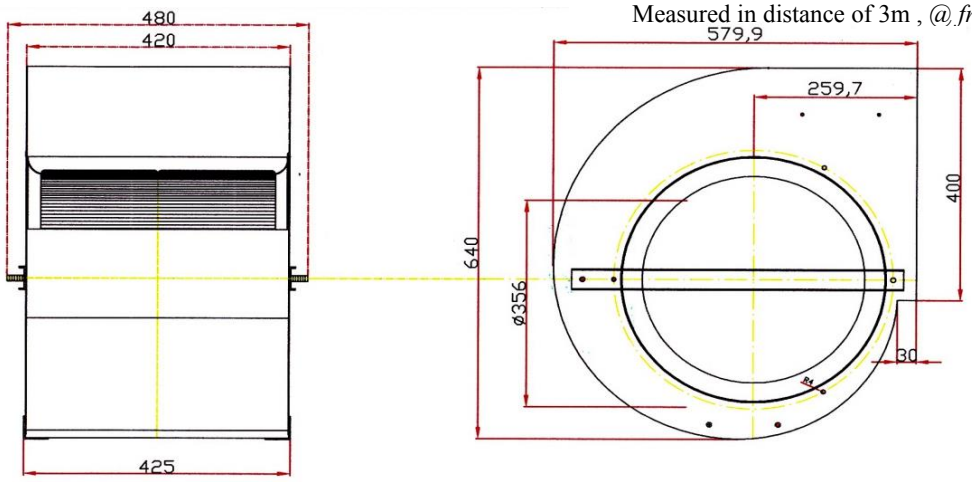
Measured in distance of 3m , *@ free air*